Manthorpe Building Products

Product Information Sheet

1m SmartDrain - Overview

CODE GPD-1000

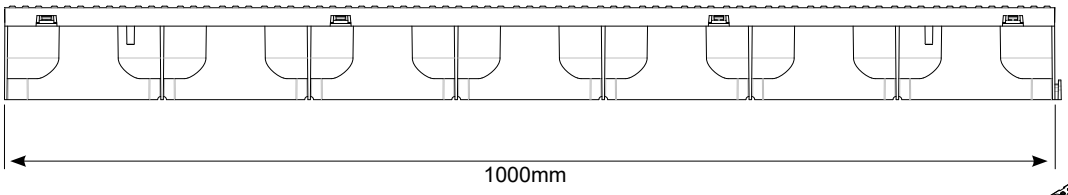

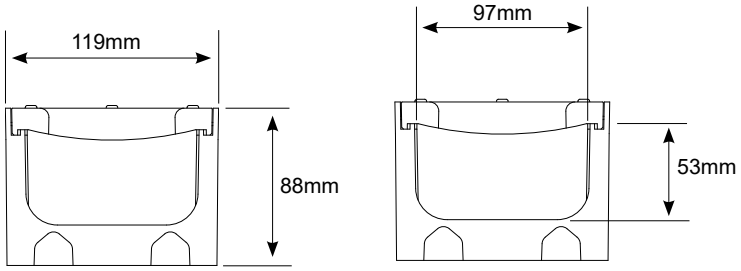

Internal dimensions

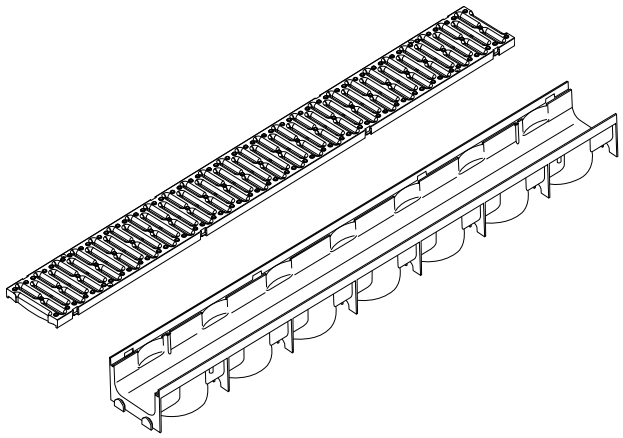

Description:

The Manthorpe 1m linear drainage channel is an easy and effective way of removing unwanted standing water into a domestic drain. The channel and grate have been independently load tested and gained an A15 load rating.

It is suitable for both pedestrian and cyclist use on driveways, patios and paths around the home. The system can be installed with any type of paving from block paving and flag stones through to Tarmac or concrete.

A leaf trap and end cap are available as accessories to the channel and grate. The leaf trap simply falls into the hole cut for the rainwater exit and will catch any large debris to avoid blocking up underground drain pipes. This is easily accessible once installed for removal and cleaning. The end cap can be fitted to both ends of the channel using the handy clip feature and forms a barrier for the concrete being poured around it when being installed as well as providing a water tight stop on the end of the channel when in use. Also available is a Junction Unit to create 90° corner, T-junction or 4-way junction. Both the Junction Unit and 1m SmartDrain are available with a choice of black or metallic effect silver grate.

References:

UKCA Mark
BS EN 1433:2002 - BRE Test Report 289 099

CE Mark
EN 1433:2005-09 - KIWA Test Report 21DE-01886OR01

Packing details	Individual lengths, 48 or 96 per pallet
Weight	1.5kg
Material	Polypropylene
Colour	Black or Silver (grate only)
Manufacturing Process	Injection Moulded

Features:

Easy to fit and maintenance free.

Sections slot together making installation quicker and easier.

Can be cut down to any length with the clip reusable at 6 points along its length.

Multiple rainwater exit points with easy cut-out features for added choice and versatillity.

Fits to a standard 4” underground plastic drainage pipe.

Clip down grate which can be further secured using 3.5 x 30mm self-tapping screws at the four points provided.

MANTHORPE BUILDING PRODUCTS LTD
MANTHORPE HOUSE
BRITTAIN DRIVE
CODNOR GATE BUSINESS PARK
RIPLEY
DERBYSHIRE DE5 3ND

TEL: 01773 303 000
FAX: 01773 303 300
EMAIL:
customercare@manthorpe.co.uk
WEB
www.manthorpebp.co.uk

DRN M.R | Date 26.06.19

The company maintains a policy of continuous development of its product range and reserves the right to amend the specification without notice.