The Complete System

SmartDrain

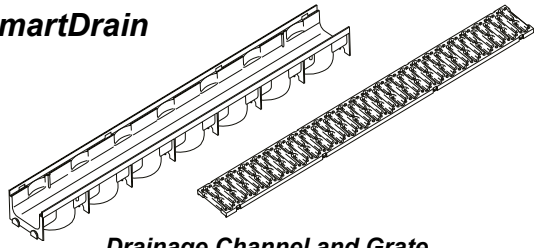

Drainage Channel and Grate
(Code: GPD-1000)
Grate available in black or silver

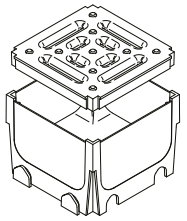

Junction unit
(Code: GPD-JU)
Grate available in black or silver



Leaf Trap

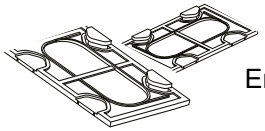

End Caps

Accessory Pack: 2 x End Cap and 1 x Leaf Trap (code: GPD-AP)

Also available: The SlotDrain channel (Code: GPDST-1000)

UK CA **BS EN 1433:2002**

13

CE **EN 1433: 2005-09**

21

Drainage channel **Type M** for the collection and conveyance of surface water from areas which can only be used by pedestrians and pedal cyclists.

Strength Class:	**A 15** in accordance with the manufacturer's installation instructions.
Channel Material:	Polypropylene
Grating Material:	Polypropylene
Dimensions:	(L) 1,000mm (W) 119mm (H) 88mm
Weathering Resistance:	NPD
Load Testing:	UKCA: BRE Test No. 289 099 CE: KIWA Test No. 21DE-01886OR01

Other products from the Manthorpe Range include Cavity Trays, Cavity Closer, Loft Doors, Roof Ventilation, Through Wall Ventilation, Joist Seals and Dry Roofing Products.

Manthorpe Building Products Limited
Manthorpe House, Brittain Drive, Codnor Gate Business Park, Ripley, Derbyshire DE5 3ND
T: (01773) 303 000 F: (01773) 303 300 E: mbp.care@manthorpebp.co.uk
W: http://www.manthorpebp.co.uk

Manthorpe

GPD-1000
SmartDrain
Linear Drainage Channel

Fitting Instructions

MBP-8240-08

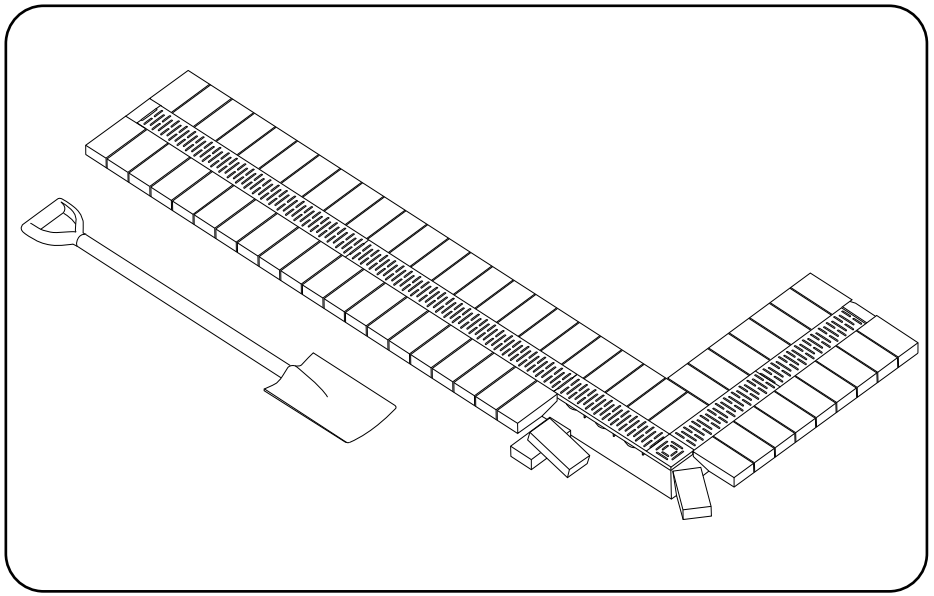

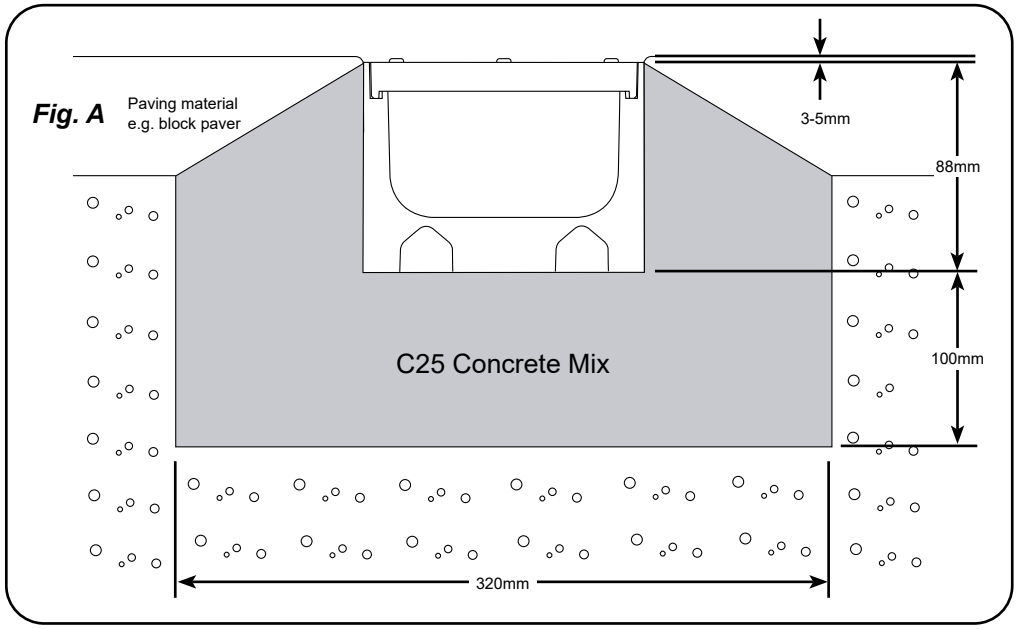

Installation

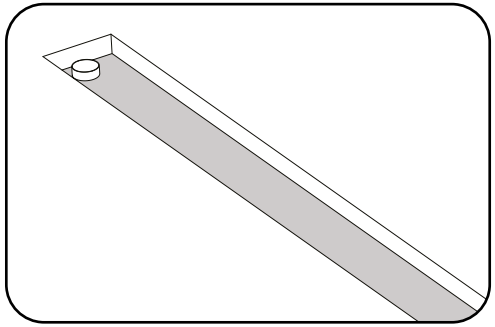

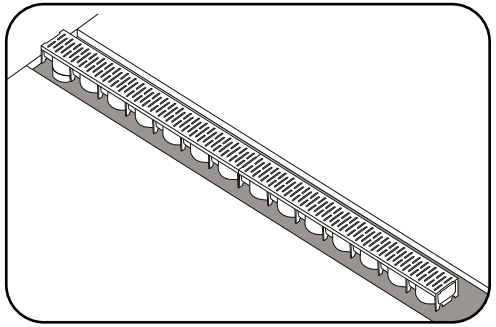

1. With an appropriate silt trap installed, dig a trench to the sizes detailed in Fig. A for the required run length. Pour a layer of semi-dry concrete in the bottom of the trench to the depth shown, the concrete used should be to the strength of a C25 mix. The top of the channel should lay 3-5mm below the top level of the paving material once installed.

2. Align the chosen exit point with the drain outlet and slot into place, bedding the channel down into the concrete base. Lay the adjacent channels, bedding down as you go. Joints between channels should be sealed with a suitable silicon or polysulphide sealant. Once bedded, haunch the channels in place to fully support the side walls of the channel.

Important: When digging the trench, it is necessary that the correct fall is integrated into the run. A fall of 1 in 40 (25mm in 1m) will guide the water to the outlet at a substantial rate to avoid the pooling of water and collection of debris. Before surrounding the channel in concrete, clip the grate into position to ensure an even and substantial fit.

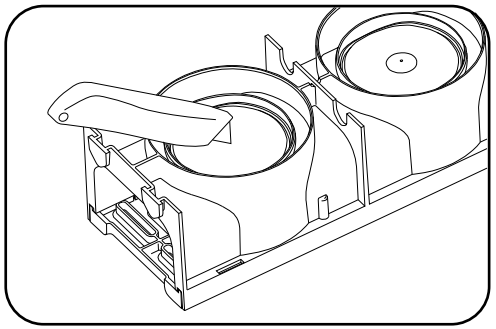

3. To remove the appropriate exit point, use either a heavy duty knife or 80mm hole saw prior to installing the channel.

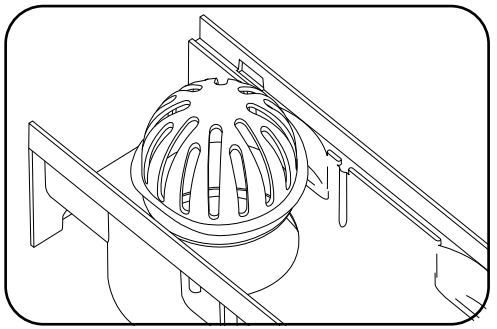

4. Once the channel is installed, fit the Leaf Trap into the outlet hole which has been created.

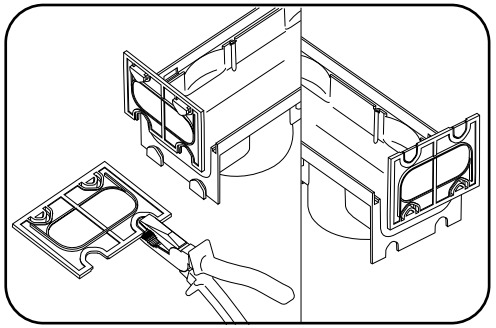

5. The End Cap can be fitted to either the male or female end of the channel. To fit it to the male end, first remove the thinned tabs using either a pair of pliers or heavy duty knife. Seal with a suitable silicon or polysulphide sealant.

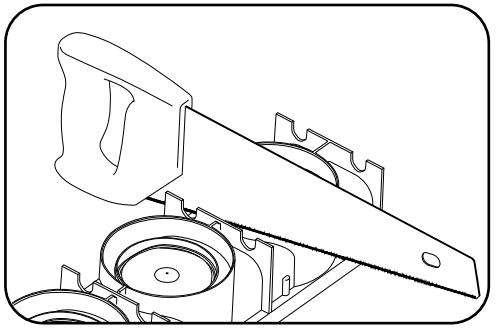

6. The 1m lengths of channel can easily be sawn down at several points along their length. There are saw points located on the underside of the product, next to the vertical ribs. By using these points, the interlock feature can be maintained.

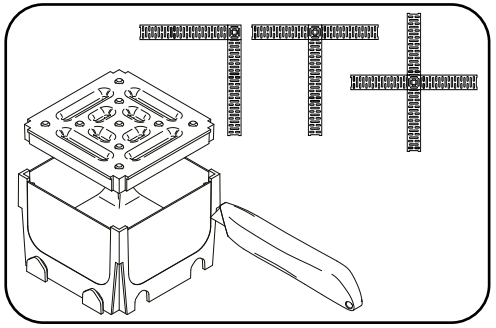

7. To create a junction, use a Manthorpe Junction Unit. Simply remove the correct blanked off sides with a craft knife to create either a 90° corner, T-junction or 4-way junction.

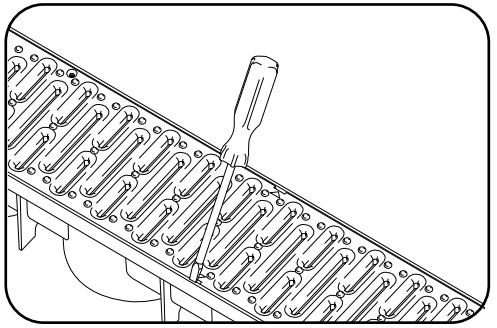

8. To remove the grate, use a flat blade screwdriver at the clip points to ease the clips open. The grate can be further secured using 4 3.5 x 30mm self tapping screws.