Mardome
Trade

TB200

Mardome Trade
Datasheet

Product Description

Brett Martin Daylight Systems Mardome Trade Rooflights are individual polycarbonate dome rooflights with a PVC-U multi-walled kerb intended for installation on flat roofs of all modern building types to provide natural light (and ventilation where specified).

Mardome Rooflights are designed and manufactured under an ISO9001 approved quality system. Product options which will help to satisfy differing requirements for light transmission, thermal performance, ventilation and acoustics are available.

Brett Martin Daylight Systems Mardome Trade Rooflight Domes have full BBA approval and are certified under 06/4385, and are also available with optional Secured by Design accreditation.

BBA APPROVAL INSPECTION TESTING CERTIFICATION
CERTIFICATE 06/4385

Secured by Design
SBD
Police Preferred Specification

Design Features

- Contemporary low rise profile (dome and pyramid options).
- U_r-value to as low as 1.01 W/m²K.
- Constant separation of glazing skins across full width of dome including fixing flange on triple skin and better glazing options. This avoids cold spots and minimises the risk of condensation.
- Components of powered opening domes (230V) are hidden for an unobstructed light well.
- Options to satisfy requirements for light transmission, thermal performance, ventilation and acoustics.
- For ease of installation the tapered kerb foot does not require timber fillets and provides a clean external finish for all roofing types.
- Secured by Design option.
- Suitable for flat roof applications with a pitch of typically 0°-15° – speak to technical for pitches greater than this.

Product Options Summary

Variants
- Fixed
- Fixed Secured by Design
- Manual opening
- Powered with wall-switch (chain actuator)
  - Optional Remote Controlled Operation
  - Optional Rain Sensor Operation
- Access Hatch

Optional Ventilation
- Manual Hit-and-Miss
- Powered extraction

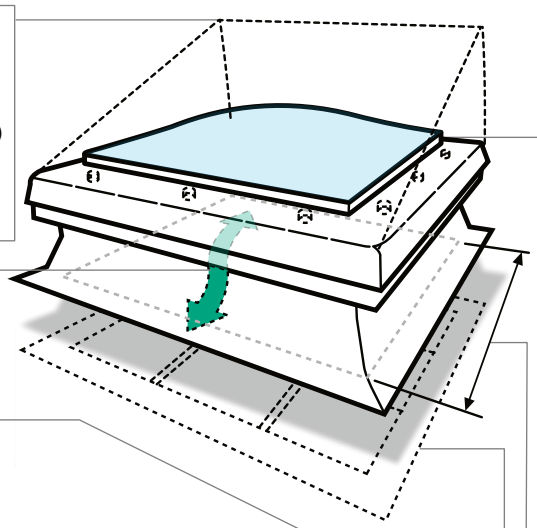

Glazing Shape
- Dome
- Pyramid

Glazing Tint
- Clear
- Patterned
- Opal

Glazing Type
- Single Skin Polycarbonate
- Double Skin Polycarbonate
- Triple Skin Polycarbonate
- Quad Skin Polycarbonate
- Polycarbonate Dome over:
  - Structured Polycarbonate
  - Argon Filled Glass

Size (roof opening)
See table under 'Available Sizes & Opening Options'

Optional Security Grille

Kerb

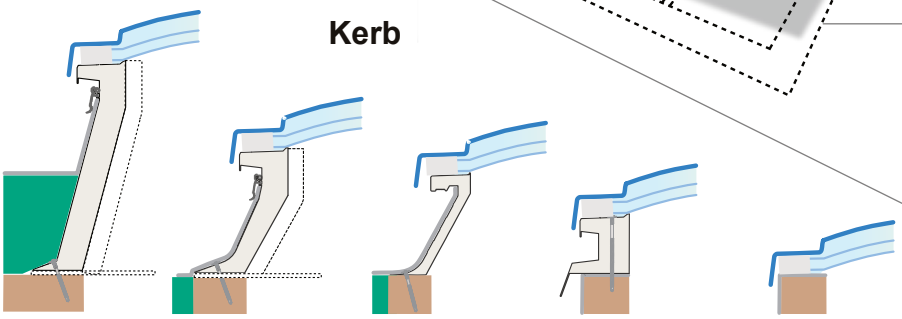

Tall 300mm PVCu*

Standard 150mm PVCu*
- kerb type varies with specification

Structural, Insulated Builders upstand - Direct Fix kerb supplied for vented and opening variants

*Acoustic Pack available for noise reduction

Brett Martin

brettmartin.com

ⓘ**TECHNICAL SUPPORT:** For any technical information/queries please contact your supplier.
The manufacturer operates a policy of continuous product improvement, and reserves the right to alter specifications at any time without notice. Every effort has been taken to ensure all details contained in this document are correct at the time of going to press but this document should be used only as a guide and does not in any way form part of a contract or warranty. It is the customer's responsibility to ensure that the product is suitable for the actual conditions of use, which are beyond the control of the manufacturer.

Mardome
Trade

TB200

Mardome Trade
Datasheet

Appearance

Mardome Trade Rooflights provide a clean interior, and unobtrusive external appearance and therefore complement the surrounding environment. The low profile dome improves the aesthetics and also the clarity of light, whilst the PVC-U kerb can conceal actuators and wiring for an obstruction free lightwell.

Composition

The outer dome of Mardome Trade is manufactured from 3mm impact resistant Marlon FSX polycarbonate sheet which is co-extruded with a UV protective coating to both sides. The inner domes are manufactured from 2mm impact resistant Marlon FS polycarbonate sheeting for double, triple and quad skin options. The kerb and hinge frames are manufactured from Lead & Cadmium free un-plasticised PVC rigid multi-wall extruded profile with internal gloss white finish. The polycarbonate, PVC-U and aluminium which comprise the product can be recycled at the end of useful product life.

Available Sizes & Opening Options

Available in a domed or a pyramid profile in a range of sizes listed in the table below.

Can also be opened on concealed hinges using actuators (manual or powered) to create a large ventilation area, or with gas struts to provide an access hatch. Available sizes for opening units are shown in the table below. Please note that restrictions on opening units apply due to wind loading and weight, and powered opening rooflights are not suitable for use in conditions at risk of high humidity (e.g. domestic bathrooms).

Opening rooflights controlled by remote (PCR) or remote & rain sensor (PCS) are not suitable for use near solar panels, due to risk of Radio Frequency interference. Where powered opening units and solar panels are specified the wall-switch option should be selected.

Daylight opening (width x length)														
		Rooflight length (mm)												
		600	750	900	1050	1200	1350	1500	1650	1800	1950	2100	2250	2400
Rooflight width (mm)	600	450 x 450	450 x 600	450 x 750	450 x 900	450 x 1050	450 x 1200	450 x 1350	450 x 1500	450 x 1650	-	-	-	-
	750	-	600 x 600	600 x 750	600 x 900	600 x 1050	600 x 1200	600 x 1350	600 x 1500	600 x 1650	600 x 1800	-	-	-
	900	-	-	750 x 750	750 x 900	750 x 1050	750 x 1200	750 x 1350	750 x 1500	750 x 1650	750 x 1800	750 x 1950	-	-
	1050	-	-	-	900 x 900	900 x 1050	900 x 1200	900 x 1350	900 x 1500	900 x 1650	900 x 1800	900 x 1950	900 x 2100	-
	1200	-	-	-	-	1050 x 1050	1050 x 1200	1050 x 1350	1050 x 1500	1050 x1650	1050 x1800	1050 x1950	1050 x 2100	1050 x 2250
	1350	-	-	-	-	-	1200 x 1200	1200 x 1350	1200 x 1500	1200 x 1650	1200 x 1800	1200 x 1950	1200 x 2100	1200 x 2250
	1500	-	-	-	-	-	-	1350 x 1350	1350 x 1500	1350 x 1650	1350 x 1800	1350 x 1950	1350 x 2100	1350 x 2250
	1650	-	-	-	-	-	-	-	1500 x 1500	1500 x 1650	1500 x 1800	1500 x 1950	1500 x 2100	1500 x 2250
	1800	-	-	-	-	-	-	-	-	1650 x 1650	1650 x 1800	1650 x 1950	1650 x 2100	1650 x 2250

Available Sizes Key

Key	Fixed	Powered Opening (PCD,PCR & PCS)	Manual Opening	Access Hatch
	✔	✔	✔	✔
	✔	✔	✔	
	✔	✔		
	✔			

Opening Options

Opening Type	Description	Geometric Ventilation Area	
		Min	Max
Manual Opening (MLD)	Hinged opening rooflight which is operated manually via a worm gear drive with an extension pole	0.300 m²	0.714 m²
Powered Opening (PCD/PCR)	Powered hinged opening rooflight with completely concealed operating mechanism. Opened and closed using a control switch or remote control	0.210 m²	1.176 m²
Sensor Controlled Powered Opening (PCS)	Powered hinged opening rooflight which includes rain sensors for automatic operation	0.210 m²	1.176 m²
Access Hatch*	To gain entry to a roof. Unit held open by two gas struts	Opening Angle of 69.0° to 84.0°	

*Not available with dome over glass

ⓘ**TECHNICAL SUPPORT:** For any technical information/queries please contact your supplier.
The manufacturer operates a policy of continuous product improvement, and reserves the right to alter specifications at any time without notice. Every effort has been taken to ensure all details contained in this document are correct at the time of going to press but this document should be used only as a guide and does not in any way form part of a contract or warranty. It is the customer's responsibility to ensure that the product is suitable for the actual conditions of use, which are beyond the control of the manufacturer.

Mardome
Trade

TB200

Mardome Trade
Datasheet

Durability

Mardome Trade Rooflights are expected to remain fit for purpose in normal industrial conditions for a period of 20 years (with a warranty available providing a 10 year guarantee) i.e. they will not become perforated, lose significant structural integrity, or distort to the extent of losing weather-tightness. The available warranty also guarantees:

- Polycarbonate used in Mardome rooflights against loss of light transmission, discolouration or loss of impact strength for 10 years.
- Electrical actuators (where present), for a period of 1 year (actuators have a design life of at least 10,000 cycles).
- Insulated glass (where present) used in the construction of the rooflight for 5 years.

Security

The design of the Mardome Trade rooflight is such that individual fixings are concealed inside security caps. Removal of these caps to gain access to the fixings is extremely difficult. In addition, polycarbonate rooflights have good resistance to impact, making breakage very difficult.

The Mardome security grille option is designed to fit beneath the foot of the kerb to provide additional security where required. It is powder coated in a white finish, and available in all sizes.

Optional fixed variants of Mardome Trade (SBD option) are accredited by Secured by Design (SBD) based on independently assessed testing in accordance with PAS24.

Please refer to BBA Certificate 06/4385 product sheet 3 for more details.

Fire Performance

B-s1,d0 in accordance with EN 13501-1.

Safety Requirements and CDM

Mardome Trade Rooflights achieve Class B non-fragility to ACR[M]001 when new and fully installed in accordance with Brett Martin Daylight Systems' installation guides. Foot traffic on rooflights should always be avoided; impacts such as foot traffic or a falling person may cause damage which could necessitate rooflight replacement.

Ventilation

Ventilation can help reduce humidity, and reduce risk of condensation and should be considered in any areas of high humidity. Mardome Rooflight kerbs may be unvented or can incorporate vents. These can either be hit-and-miss manually controlled trickle vents or high powered extraction ventilation.

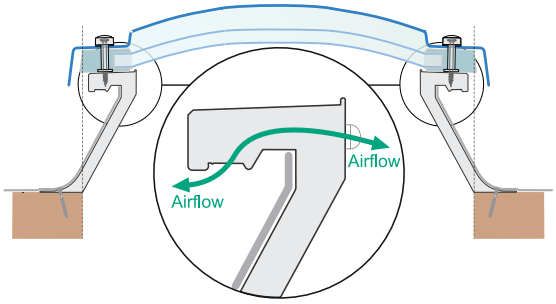

Ventilation Options

Ventilation Type	Description	Rating
Trickle Ventilation (Hit-and-Miss)	Manually operated trickle ventilation provides background ventilation to the interior	Provides 8400mm² Equivalent Area Ventilation*
'Powervent' high extraction ventilation	Kerb mounted, electrically powered fans providing excellent extraction rates for a variety of applications	Ventilation levels between 55-880 m³/hr depending on number of fans and rooflight size**

* Trickle ventilation may be restricted on some Access Hatch options.
**1-4 extraction fans available - maximum quantity dependent on rooflight size.

Standard Glazing Values

Mardome Trade Rooflights are available with a selection of glazing tint options depending on the required level of light transmission.

Glazing Performance

Tint	Light Effect	Light Transmission			Shading Coefficient			Transmittance (G-Value)		
		Double Skin	Triple Skin	Quad Skin	Double Skin	Triple Skin	Quad Skin	Double Skin	Triple Skin	Quad Skin
Clear	High Visibility	85%	78%	72%	0.84	0.76	0.70	0.73	0.66	0.61
Opal	Diffused light & Solar Control	35%	32%	30%	0.38	0.34	0.32	0.33	0.30	0.28
Patterned	Privacy	78%	72%	66%						

ⓘ**TECHNICAL SUPPORT:** For any technical information/queries please contact your supplier.
The manufacturer operates a policy of continuous product improvement, and reserves the right to alter specifications at any time without notice. Every effort has been taken to ensure all details contained in this document are correct at the time of going to press but this document should be used only as a guide and does not in any way form part of a contract or warranty. It is the customer's responsibility to ensure that the product is suitable for the actual conditions of use, which are beyond the control of the manufacturer.

Mardome Trade

TB200

Mardome Trade Datasheet

Thermal Performance (England, Scotland and Wales)
These polycarbonate rooflights have been assessed in the horizontal plane using the methodology in EN 1873:2014 and in accordance with Rooflight Association (formerly NARM) NTD2. Thermal transmittance is defined as a U_{rc} value for a rooflight with combined PVC kerb and a U_r value for a rooflight fitted to a builders upstand. The thermal transmittance values (assessed horizontally) are shown below.

Thermal Performance (England, Scotland and Wales)

Rooflight Variant		Size range	Surface:area ratio	DOUBLE SKIN	TRIPLE SKIN	QUAD SKIN	DOME OVER GLASS	DOME OVER STRUCTURED
				U_r / U_{rc} value	U_r / U_{rc} value	U_r / U_{rc} value	U_r / U_{rc} value	U_r / U_{rc} value
				W/(m².K)	W/(m².K)	W/(m².K)	W/(m².K)	W/(m².K)
Unvented, Fixed Rooflight on Builders Upstand	(U_r)	600 x 600	1.11	1.94	1.26	1.01	1.04	1.39
		1800 x 2400	1.03	2.66	1.77	1.35	1.25	1.37
Vented or Opening Rooflight on Builders Upstand	(U_r)	600 x 600	1.72	2.24	1.79	1.63	1.66	1.88
		1800 x 2400	1.22	2.67	1.93	1.56	1.48	1.58
Rooflight with standard 150mm Sloped Kerb	($U_{rc\ 150}$)	600 x 600	2.52	2.14	1.84	1.73	1.75	1.90
		1800 x 2400	1.44	2.56	1.92	1.62	1.55	1.63
Rooflight with standard 300mm Tall Kerb	($U_{rc\ 300}$)	600 x 600	3.59	1.96	1.75	1.67	1.68	1.79
		1800 x 2400	1.74	2.38	1.85	1.60	1.54	1.61

*The overall thermal performance of rooflights is still referred to as a U_d-value in the building regulations, rather than U_r/U_{rc} value as per the calculation method. Values stated are therefore equivalent to a U_d-value assessed horizontally.

Thermal Performance (Republic of Ireland and Northern Ireland)
The thermal transmittance of these rooflights is measured by BS EN ISO 12567-2: 2005, where they have been assessed in the vertical plane. The thermal performance is declared as a U_d-value and centre pane U-value of the glazing system and is shown in the table below.

Thermal Performance (Republic of Ireland and Northern Ireland)

Rooflight Variant	Size range	DOUBLE SKIN	TRIPLE SKIN	QUAD SKIN	DOME OVER GLASS	DOME OVER STRUCTURED
		U_d value	U_d value	U_d value	U_d value	U_d value
		W/(m².K)	W/(m².K)	W/(m².K)	W/(m².K)	W/(m².K)
Unvented, Fixed Rooflight on Builders Upstand	600 x 600	2.70	1.80	1.40	0.90	1.20
	1800 x 2400					
Vented or Opening Rooflight on Builders Upstand	600 x 600	1.99	1.49	1.28	1.02	1.17
	1800 x 2400	2.41	1.67	1.35	0.95	1.19
Rooflight with standard 150mm Sloped Kerb	600 x 600	1.56	1.25	1.12	0.95	1.05
	1800 x 2400	2.12	1.52	1.25	0.93	1.12
Rooflight with standard 300mm Tall Kerb	600 x 600	1.39	1.17	1.08	0.96	1.03
	1800 x 2400	1.94	1.43	1.21	0.94	1.10

Condensation Resistance
Mardome Trade (triple skin and better insulated variants) are designed for optimal thermal performance and resistance to condensation. This provides full insulation across the whole width of the rooflight (including the fixing flange), eliminating any cold spots associated with traditional methods of dome rooflight construction and giving a much higher f-factor. See BBA certificate 06/4385, product sheet 3, for further details.

ⓘ**TECHNICAL SUPPORT:** For any technical information/queries please contact your supplier.
The manufacturer operates a policy of continuous product improvement, and reserves the right to alter specifications at any time without notice. Every effort has been taken to ensure all details contained in this document are correct at the time of going to press but this document should be used only as a guide and does not in any way form part of a contract or warranty. It is the customer's responsibility to ensure that the product is suitable for the actual conditions of use, which are beyond the control of the manufacturer.

Mardome
Trade

TB200

Mardome Trade
Datasheet

Acoustic Performance

For applications where acoustic performance is particularly important, the Mardome acoustic pack is an option. The acoustic pack is not available with opening or vented products, but is offered with all other variants and has a positive contribution on acoustic attenuation levels and rain penetration noise and can assist in achieving BREEAM credits. For a triple skin polycarbonate glazed Mardome Trade the addition of an acoustic pack reduces the rain noise penetration by LiA=15dB, (when every 10dB represents a halving of noise levels).

An alternative to the acoustic pack is to specify a dome with the argon filled double glazed glass inner option. Whilst not as effective as the Acoustic Pack, this option is available in conjunction with ventilation, and in some opening options, if required. Mardome Rooflights are independently tested for Rain Noise Penetration to BS EN 140-18: 2006.

Acoustic Performance

Rooflight Variant	Rain Noise Penetration (LiA)	Airborne Sound Index (Rw)
Standard Single Skin Polycarbonate		12 dB
Standard Double Skin Polycarbonate		20 dB
Standard Triple Skin Polycarbonate	61.8 dB	22 dB
Argon Filled Glass Inner Glazing	53.9 dB	
Triple Skin Polycarbonate with acoustic Pack*	46.7 dB	

10dB reduction equates to a drop of 50% in the sound level.
*Acoustic pack is only available with fixed, unventilated products.

Wind and Snow Loads

Mardome Rooflights have been independently tested to show that when correctly fitted in accordance with our instructions, they will resist wind loads calculated in accordance with BS EN 1991-1-4: 2005, and imposed loads in accordance with BS EN 1873: 2014.

Please refer to BBA Certificate 06/4385, Product Sheet 3, for more info.

Resistance to Snow & Wind Loads

Rooflight Variant	Dimensions mm x mm	Snow Load (Downward) N/m²	Wind Load (Upward) N/m²
Domed	1200 x 2400	1125	1500
Pyramid	1500 x 1500	1750	3000

Product Dimensions

Mardome Trade Rooflights offer differing kerb options depending on project specification. The Mardome 150mm or 300mm Kerb is offered for use when there is no pre-existing structural, insulated upstand, or when over-sailing the current upstand is prefered. When the rooflight is to be fitted to an existing structural, insulated upstand, unventilated Trade rooflights are to be fitted directly, whilst ventilated or opening Trade rooflights are supplied complete with a Direct Fix kerb.

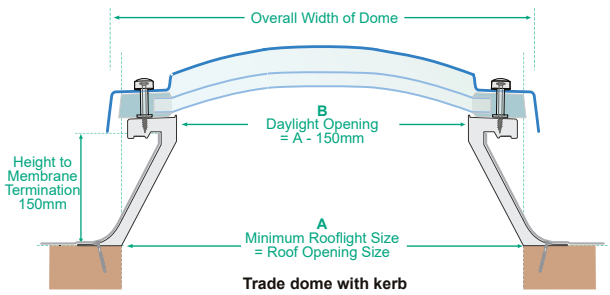

Trade dome with kerb

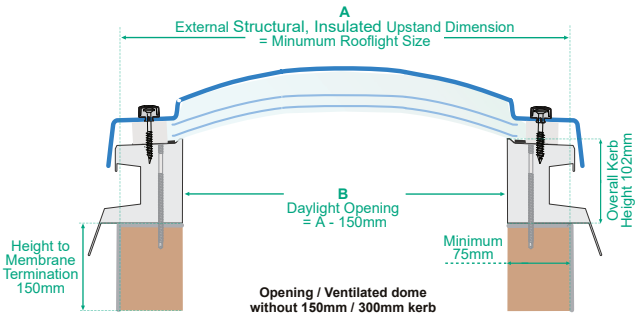

Opening / Ventilated dome without 150mm / 300mm kerb

Product Overall Height & Weight

Rooflight Variant	Nominal Size	Direct Fix Kerb		150mm Kerb		300mm Kerb	
		H (mm)	W (kg)	H (mm)	W (kg)	H (mm)	W (kg)
Fixed Trade Dome	600 x 600	197	7.1	311	10.9	461	13.3
	2400 x 1800	313	62.9	427	71.9	577	79.7
Opening Trade Dome	600 x 600	232	12.1	346	15.0	496	17.4
	1800 x 1800	348	54.1	462	61.6	612	68.3

Note: Weights based on triple skin dome.
Not all product options available - contact Brett Martin Daylight Systems for advice

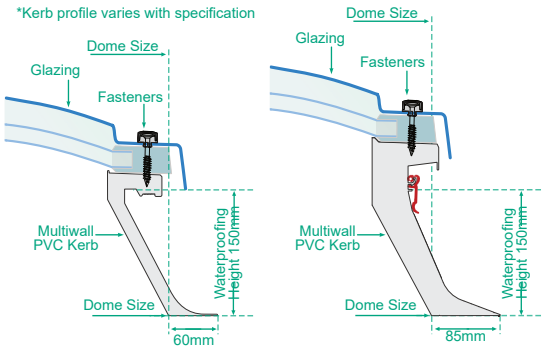

Mardome Trade Rooflight products have differing height and weight. As this value varies with rooflight size and specification, a range of values are quoted in the table above. For more details contact Brett Martin Daylight Systems.

ⓘ**TECHNICAL SUPPORT:** For any technical information/queries please contact your supplier.
The manufacturer operates a policy of continuous product improvement, and reserves the right to alter specifications at any time without notice. Every effort has been taken to ensure all details contained in this document are correct at the time of going to press but this document should be used only as a guide and does not in any way form part of a contract or warranty. It is the customer's responsibility to ensure that the product is suitable for the actual conditions of use, which are beyond the control of the manufacturer.

Mardome Trade

TB200

Mardome Trade Datasheet

Installation, Handling, Maintenance & Storage
Full installation details, maintenance and product care details are available on request.

Service temperature
This product is designed for typical building usage and climate in the UK, with a service temperature of -20°C to 60°C. Products installed on buildings with unusual usage and/or in countries with more extreme climates, may experience material temperatures outside of the stated service temperature range. It is the customer's responsibility to ensure the product is suitable for the expected material temperatures of the location where it is to be installed.

Regulatory requirements
This product is designed for typical UK regulatory requirements, however UK regulations are complex and there may be scenarios where the product is not appropriate. It is the customer's responsibility to ensure the product is suitable for the regulatory requirements of the specific location where it is to be installed. The manufacturer is unable to provide guidance on how the product meets regulatory requirements outside the UK.

ⓘ**TECHNICAL SUPPORT:** For any technical information/queries please contact your supplier.
The manufacturer operates a policy of continuous product improvement, and reserves the right to alter specifications at any time without notice. Every effort has been taken to ensure all details contained in this document are correct at the time of going to press but this document should be used only as a guide and does not in any way form part of a contract or warranty. It is the customer's responsibility to ensure that the product is suitable for the actual conditions of use, which are beyond the control of the manufacturer.